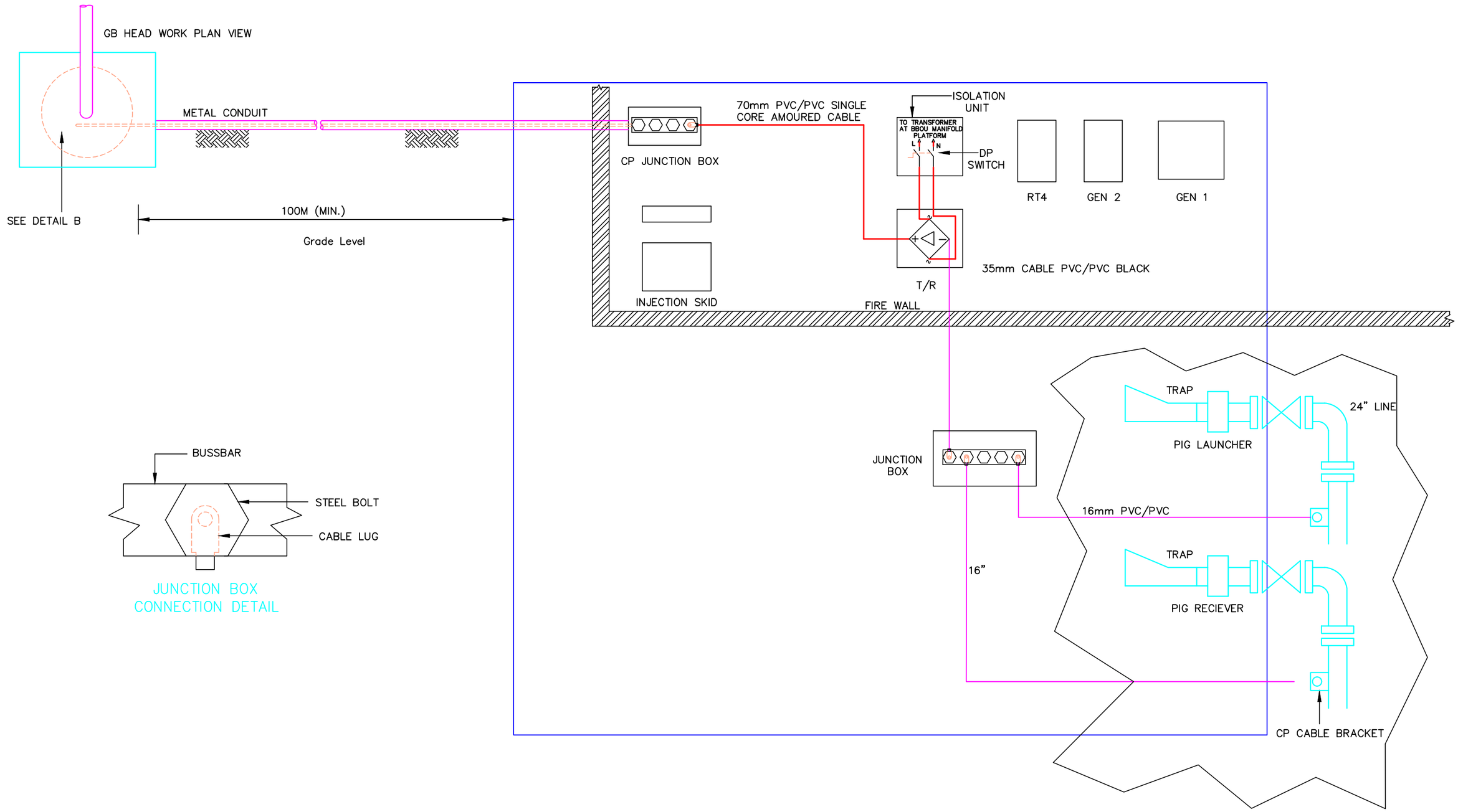

REFERENCE DRAWINGS	DRAWING No.

NOTES:

* The transformer indicated on the platform will have to be instrument transformer

REV		DRAWN	CHK	END	DATE
R01	ISSUED FOR REVIEW	CAA	LBJ	WEI	08/08/2022

COPY RIGHT RESERVED

CONTRACTOR: epic ATLANTIC

ENDORSEMENT

RELEASED FOR	DESIGN ENGR.	BFPC TECH REP	SPDC TECH REP	DATE

BRASS FERTILIZER & PETROCHEMICAL COMPANY LIMITED

brass fertilizer

GAS PROCESSING AND METHANOL COMPLEX PROJECT
FEED FOR GAS GATHERING PIPELINES

LOCATION
CP-GB LAYOUT BBOU MANIFOLD PLATFORM

DRAWN: –	DATE: –	SHEET: 1 of 6
CHECKED: –	DRAWING No. EA-BFPCL-GPMC-GGPL-FEED-ELE-DWG-014	REV.
ENDORSED: –	PROJECT No. –	–
APP'D DATE: –	PROJECT No. –	

1M ANODE LENGHT
3M SPECING INTERVALS.

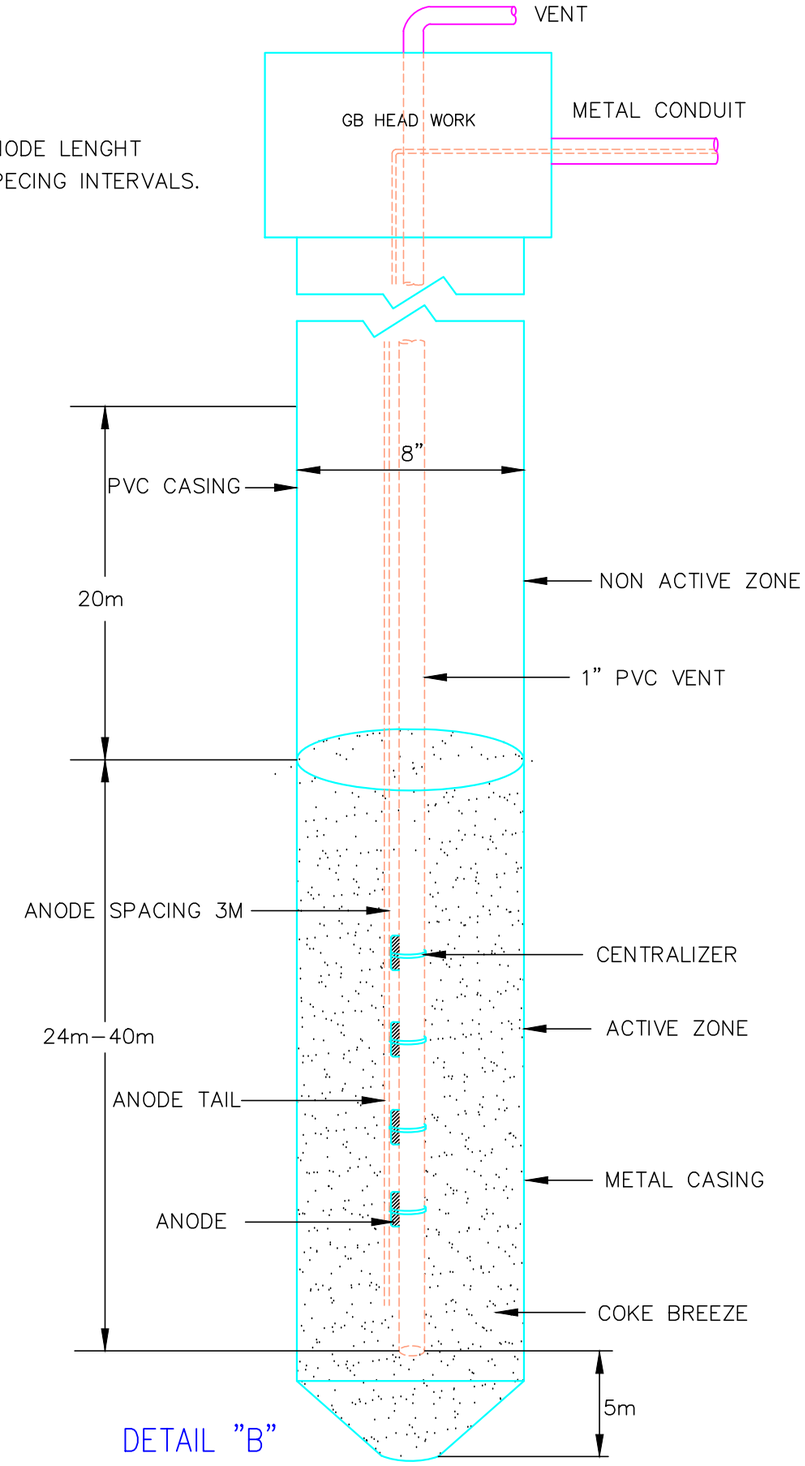

DETAIL "B"

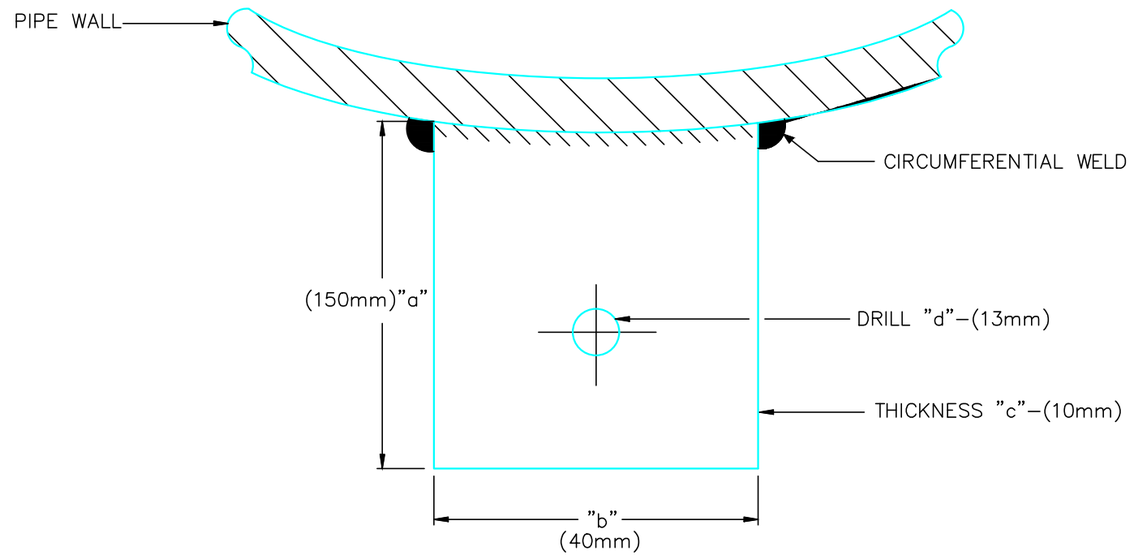

TYPE	PIPE LINE DIA.	BRACKET "a"x"b"x"c"	DRILL HOLE DIA. "d"
3	20" & OVER	150x50x10	13mm
4	ALL PIPES FOR TEST POSTS	50x40x6	8mm

DETAIL "B"

NOTES:

1 BRACKET TO BE WELDED CIRCUMFERENTIALLY TO BOTTOM OF PIPELINE ON EACH SIDE OF INSULATED FLANGES AND AS DIRECTED FOR EXACT LOCATION SEE CONSTRUCTION DRAWINGS

REFERENCE DRAWINGS	DRAWING No.

NOTES:

REV		DRAWN	CHK	END	DATE
R01	ISSUED FOR REVIEW	CAA	LBJ	WEI	08/08/2022

COPY RIGHT RESERVED

CONTRACTOR: epic ATLANTIC

ENDORSEMENT

RELEASED FOR	DESIGN ENGR.	BFPC TECH REP	SPDC TECH REP	DATE

BRASS FERTILIZER & PETROCHEMICAL COMPANY LIMITED

brass fertilizer

GAS PROCESSING AND METHANOL COMPLEX PROJECT
FEED FOR GAS GATHERING PIPELINES

CP–GB LAYOUT DRAWING BBOU MANIFOLD PLATFORM

DRAWN: –	DATE: –	SHEET: 2 of 6	
CHECKED: –	DRAWING No. EA-BFPCL-GPMC-GGPL-FEED-ELE-DWG-014		REV.
ENDORSED: –	PROJECT No. –		–
APP'D DATE: –	PROJECT No. –		

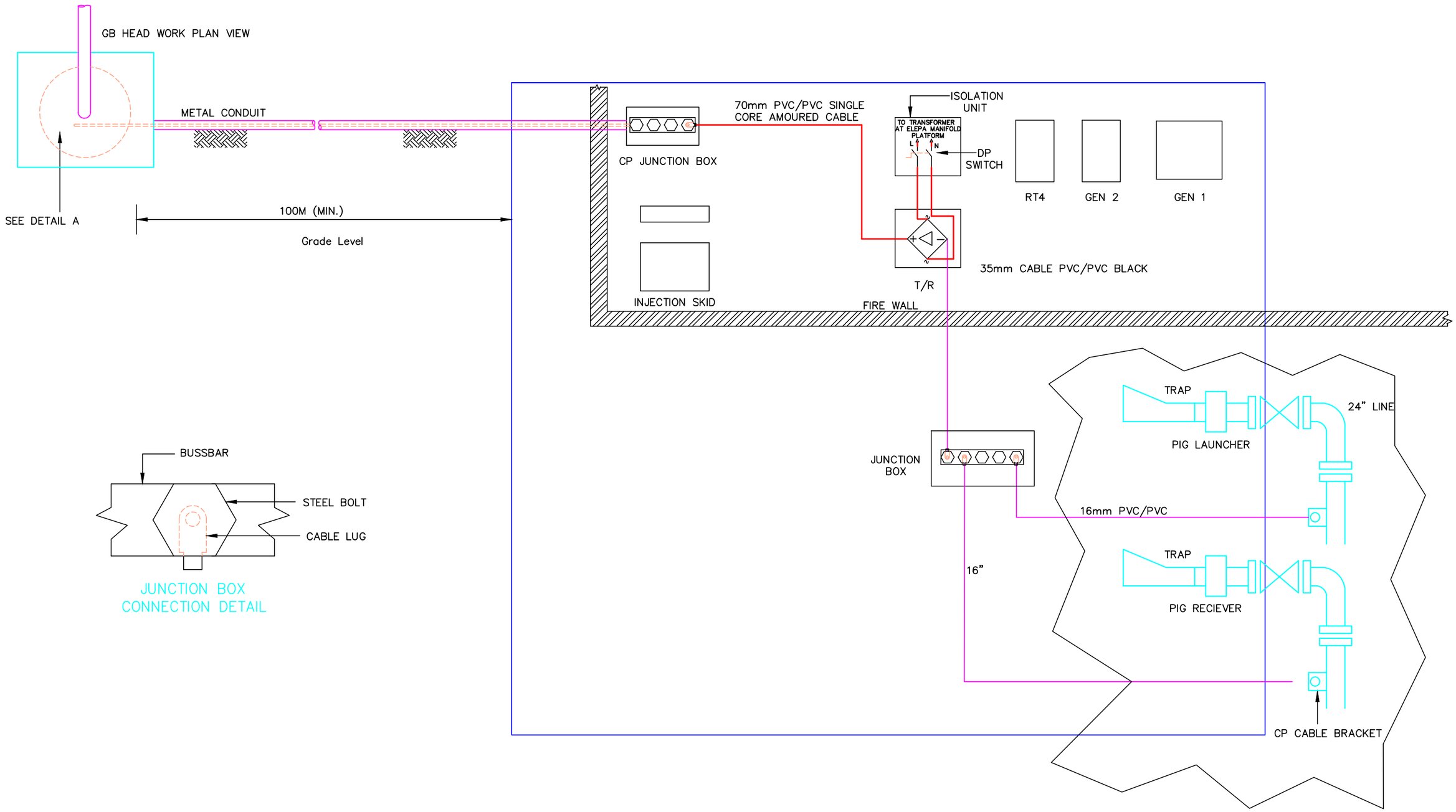

REFERENCE DRAWINGS	DRAWING No.

NOTES:

* The transformer indicated on the platform will have to be instrument transformer

REV		DRAWN	CHK	END	DATE
R01	ISSUED FOR REVIEW	CAA	LBJ	WEI	08/08/2022

COPY RIGHT RESERVED

CONTRACTOR: epic ATLANTIC

ENDORSEMENT

RELEASED FOR	DESIGN ENGR.	BFPC TECH REP	SPDC TECH REP	DATE

BRASS FERTILIZER & PETROCHEMICAL COMPANY LIMITED

brass fertilizer

GAS PROCESSING AND METHANOL COMPLEX PROJECT
FEED FOR GAS GATHERING PIPELINES

LOCATION
CP-GB LAYOUT ELEPA MANIFOLD PLATFORM

DRAWN: –	DATE: –	SHEET: 3 of 6
CHECKED: –	DRAWING No: EA-BFPCL-GPMC-GGPL-FEED-ELE-DWG-014	REV.
ENDORSED: –	PROJECT No. –	–
APP'D DATE: –	PROJECT No. –	

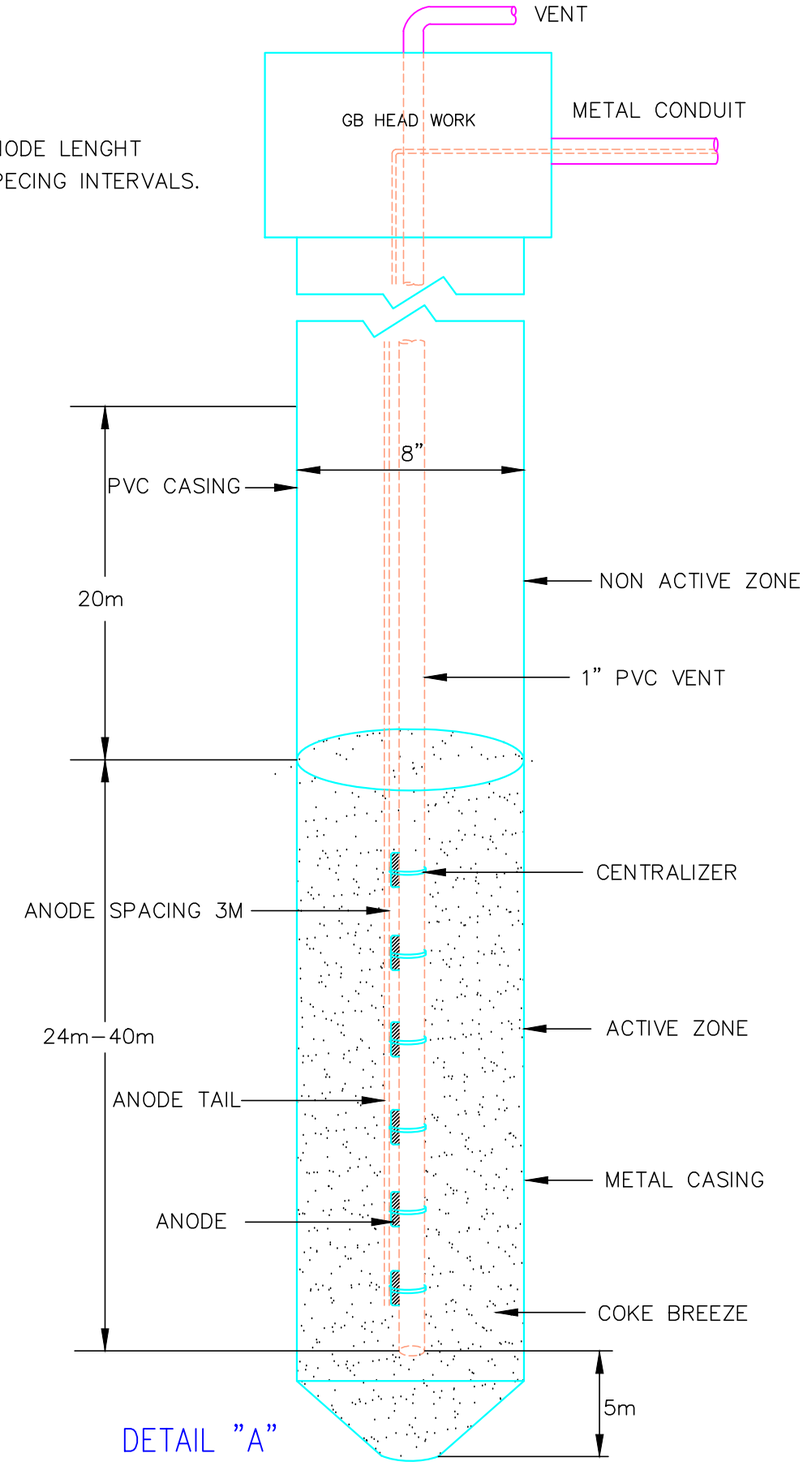

DETAIL "A"

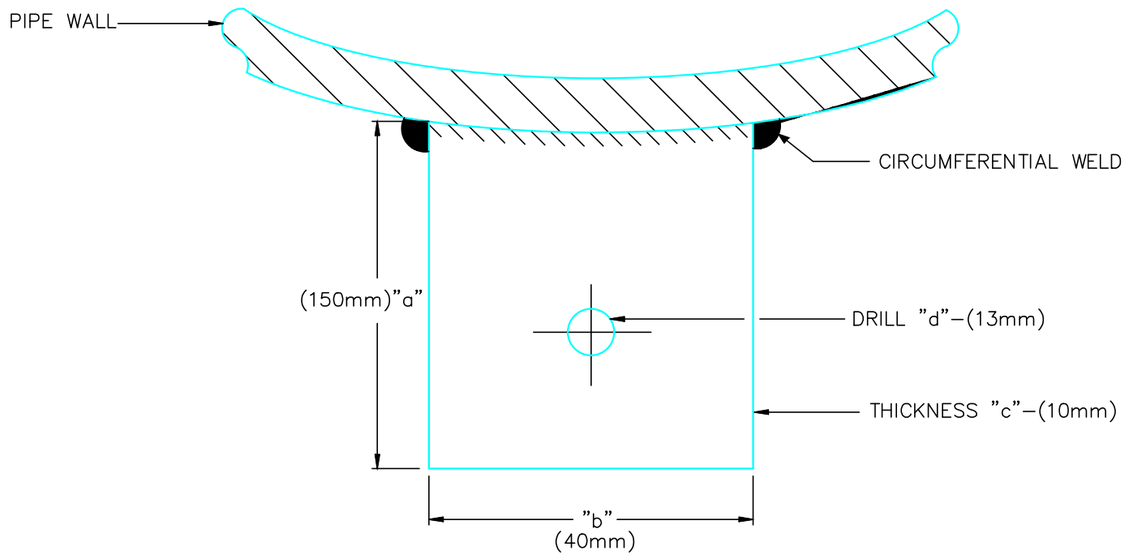

TYPE	PIPE LINE DIA.	BRACKET "a"x"b"x"c"	DRILL HOLE DIA. "d"
3	20" & OVER	150x50x10	13mm
4	ALL PIPES FOR TEST POSTS	50x40x6	8mm

DETAIL "B"

NOTES:

1 BRACKET TO BE WELDED CIRCUMFERENTIALLY TO BOTTOM OF PIPELINE ON EACH SIDE OF INSULATED FLANGES AND AS DIRECTED FOR EXACT LOCATION SEE CONSTRUCTION DRAWINGS

REFERENCE DRAWINGS	DRAWING No.

NOTES:

REV		DRAWN	CHK	END	DATE
R01	ISSUED FOR REVIEW	CAA	LBJ	WEI	08/08/2022

COPY RIGHT RESERVED

CONTRACTOR: epic ATLANTIC

ENDORSEMENT

RELEASED FOR	DESIGN ENGR.	BFPC TECH REP	SPDC TECH REP	DATE

BRASS FERTILIZER & PETROCHEMICAL COMPANY LIMITED

brass fertilizer

GAS PROCESSING AND METHANOL COMPLEX PROJECT
FEED FOR GAS GATHERING PIPELINES

CP–GB LAYOUT DRAWING ELEPA MANIFOLD PLATFORM

DRAWN: –	DATE: –	SHEET: 4 of 6	
CHECKED: –	DRAWING No. EA-BFPCL-GPMC-GGPL-FEED-ELE-DWG-014		REV.
ENDORSED: –	PROJECT No. –		–
APP'D DATE: –	PROJECT No. –		

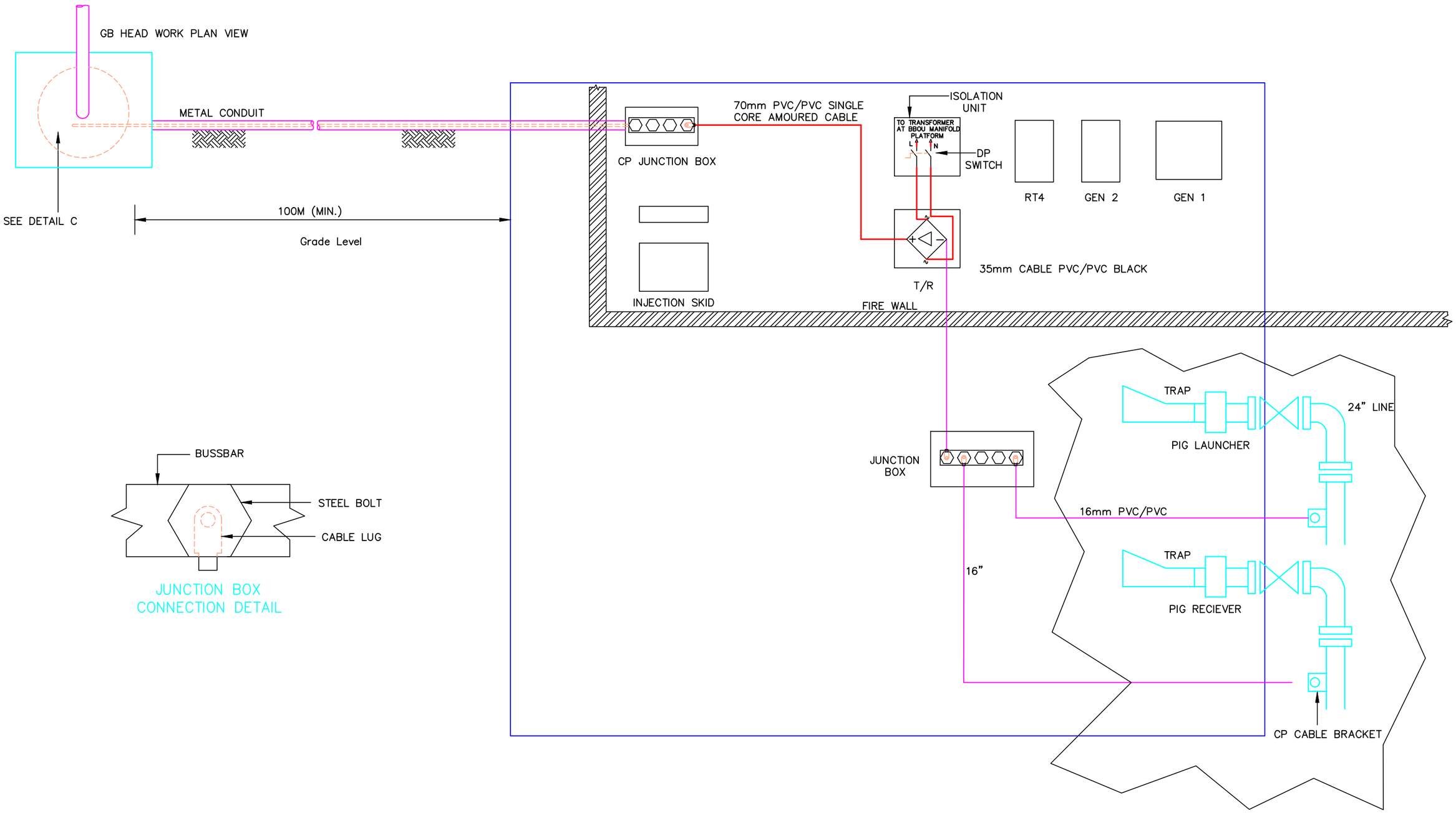

REFERENCE DRAWINGS	DRAWING No.

NOTES:

REV		DRAWN	CHK	END	DATE
R01	ISSUED FOR REVIEW	CAA	LBJ	WEI	08/08/2022

COPY RIGHT RESERVED

CONTRACTOR

epic ATLANTIC

ENDORSEMENT

RELEASED FOR	DESIGN ENGR.	BFPC TECH REP	SPDC TECH REP	DATE

BRASS FERTILIZER & PETROCHEMICAL COMPANY LIMITED

brass fertilizer

GAS PROCESSING AND METHANOL COMPLEX PROJECT
FEED FOR GAS GATHERING PIPELINES

LOCATION
CP–GB LAYOUT AKABEL

DRAWN: –	DATE: –	SHEET: 5 Of 6	
CHECKED: –	DRAWING No. EA-BFPCL-GPMC-GGPL-FEED-ELE-DWG-014		REV.
ENDORSED: –	PROJECT No. –		–
APP'D DATE: –	PROJECT No. –		

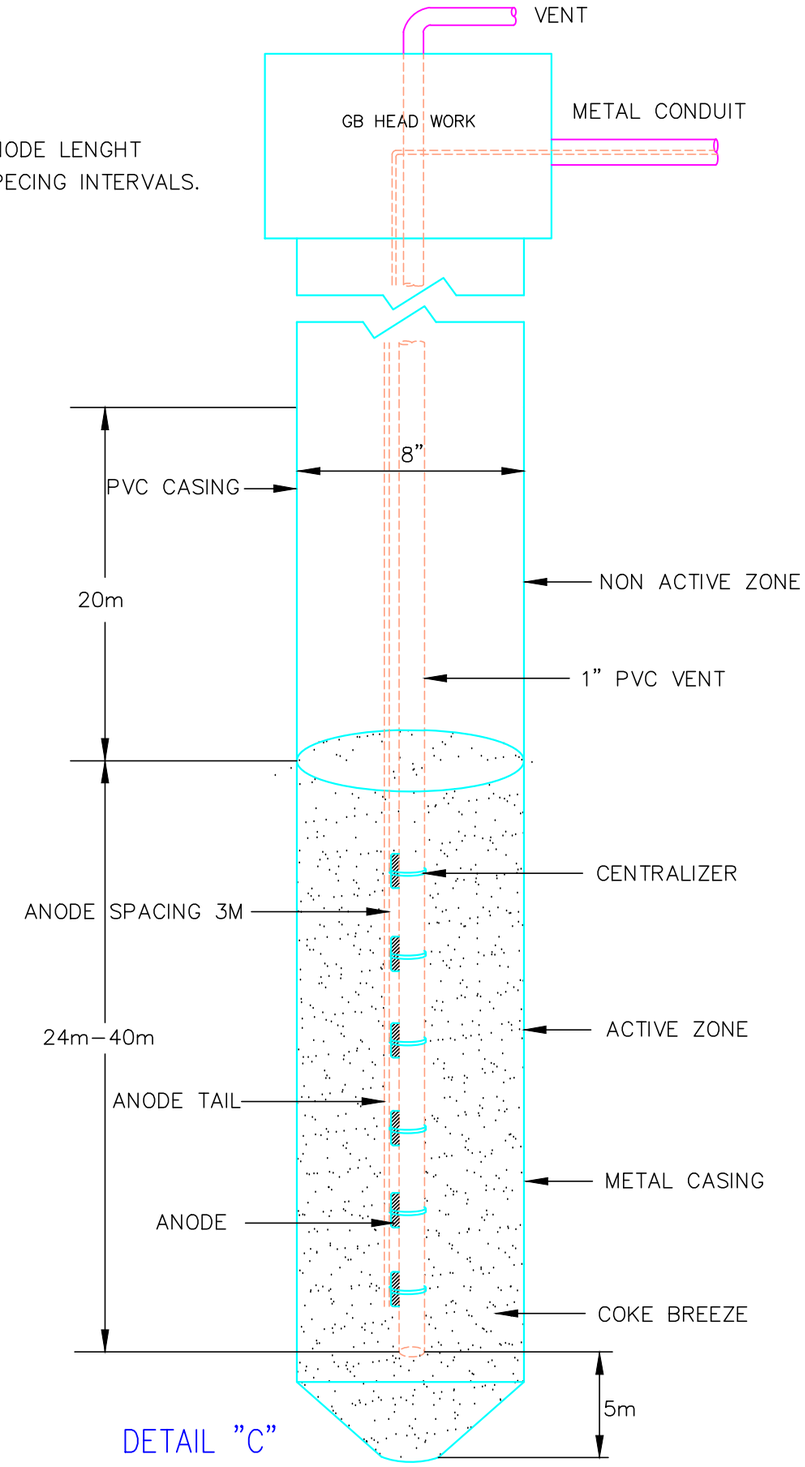

DETAIL "C"

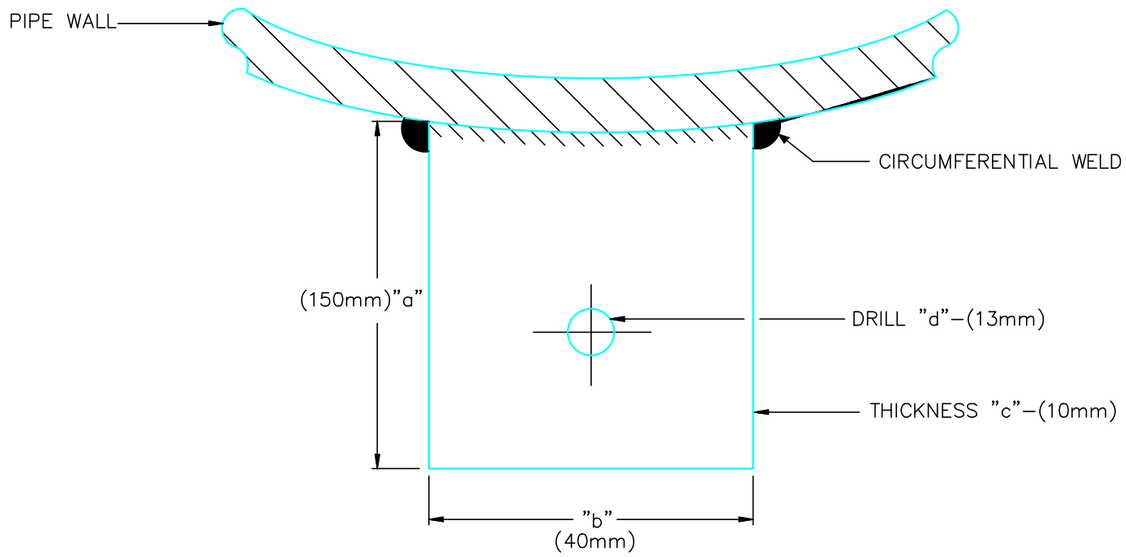

TYPE	PIPE LINE DIA.	BRACKET "a"x"b"x"c"	DRILL HOLE DIA. "d"
3	20" & OVER	150x50x10	13mm
4	ALL PIPES FOR TEST POSTS	50x40x6	8mm

DETAIL "B"

NOTES:

1 BRACKET TO BE WELDED CIRCUMFERENTIALLY TO BOTTOM OF PIPELINE ON EACH SIDE OF INSULATED FLANGES AND AS DIRECTED FOR EXACT LOCATION SEE CONSTRUCTION DRAWINGS

REFERENCE DRAWINGS	DRAWING No.

NOTES:

REV		DRAWN	CHK	END	DATE
R01	ISSUED FOR REVIEW	CAA	LBJ	WEI	08/08/2022

COPY RIGHT RESERVED

CONTRACTOR: epic ATLANTIC

ENDORSEMENT

RELEASED FOR	DESIGN ENGR.	BFPC TECH REP	SPDC TECH REP	DATE

BRASS FERTILIZER & PETROCHEMICAL COMPANY LIMITED

brass fertilizer

GAS PROCESSING AND METHANOL COMPLEX PROJECT
FEED FOR GAS GATHERING PIPELINES

CP–GB LAYOUT DRAWING AKABEL

DRAWN: –	DATE: –	SHEET: 6 of 6	
CHECKED: –	DRAWING No: EA-BFPCL-GPMC-GGPL-FEED-ELE-DWG-014		REV.
ENDORSED: –	PROJECT No. –		–
APP'D DATE: –	PROJECT No. –		